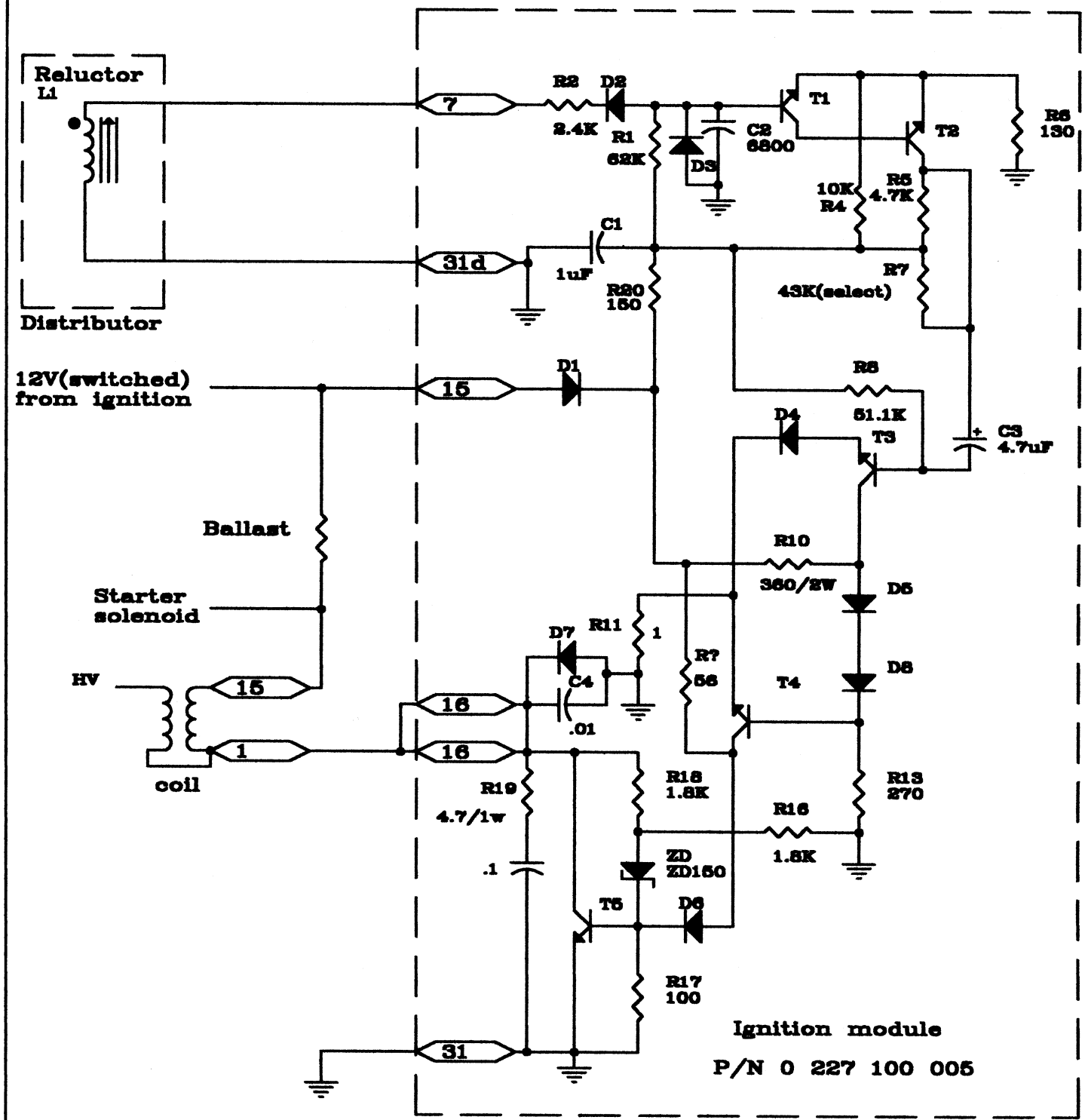

Size	Document Number	REV
A		
Date: October 4, 1994	Sheet of	