Relative Clauses
LING 233B
March 5, 2002

Syntax of relative clauses

- A relative clause is a kind of long distance dependency:

  (1) The student who Gonzo knows

  (2) The student who Gonzo realized that Alli knows

- Other long distance dependencies:

  (3) Who did Gonzo realize that Alli knows?
  (wh-question)

  (4) This student, Gonzo realizes that Alli knows.
  (topicalization)

  (5) It's this student who Gonzo realizes that Alli knows.
  (cleft)

  (6) What Gonzo realizes that Alli knows is that this student arrived.
  (pseudo-cleft)

A simple example

(7) a man who Chris saw

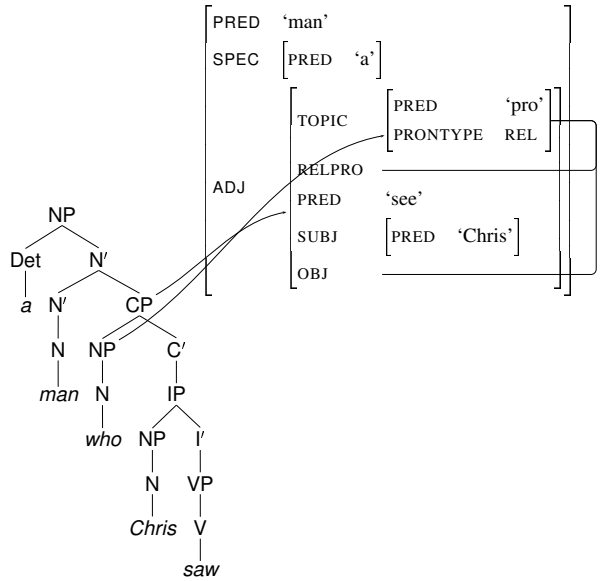

The c-structure rules

(8) $$N' \longrightarrow \begin{pmatrix} N' \\ \uparrow = \downarrow \end{pmatrix} \quad \begin{matrix} CP^* \\ \downarrow \in (\uparrow \text{ ADJ}) \end{matrix}$$

(9) $$CP \longrightarrow \begin{pmatrix} \text{RelP} \\ (\uparrow \text{ TOPIC}) = \downarrow \\ (\uparrow \text{ TOPIC}) = (\uparrow \text{ RTopicPath}) \\ (\uparrow \text{ RELP}) = (\uparrow \text{ TOPIC RelPath}) \\ (\uparrow \text{ RELP PRONTYPE}) =_c \text{REL} \end{pmatrix} \quad \begin{pmatrix} C' \\ \uparrow = \downarrow \end{pmatrix}$$

More on the c-structure rules

(10) RelP $\equiv$ {NP | PP | AP | AdvP}

(11) a. NP: a man <u>who</u> I selected

b. PP: a man <u>to whom</u> I gave a book

c. AP: the kind of guy <u>proud of whom</u> I could never be

d. AdvP: the city <u>where</u> I live

Islands

(12) a man who you think that David saw

(13) *a man who you whispered that David saw

(14) *a man who [that David saw __] surprised me

(15) the hammer which you smashed the vase with

(16) *a man who we think that David laughed when we selected

(17) English RTopicPath:

$$\{\text{XCOMP} \mid \underset{(\rightarrow \text{LDD}) \neq -}{\text{COMP}} \mid \underset{(\rightarrow \text{TENSE})}{\text{OBJ}}\}^* \quad \{(\text{ADJ} \underset{\neg(\rightarrow \text{TENSE})}{\in}) \ (\text{GF}) \mid \text{GF}\}$$

Semantics of relative clauses

- A relative clause is a noun modifier, like an adjective.
- So relative clauses are of type ⟨⟨e,t⟩,⟨e,t⟩⟩.

(18) man
$\lambda X.man(X)$

(19) man who Chris saw
$\lambda X.person(X) \wedge see(Chris, X) \wedge man(X)$

Semantic composition

(20) man who Chris saw

$$\begin{bmatrix} \text{PRED} & \text{'man'} \\ f\begin{bmatrix} \text{ADJ} & \left\{ g\begin{bmatrix} \text{TOPIC} & h\begin{bmatrix} \text{PRED} & \text{'pro'} \\ \text{PRONTYPE} & \text{REL} \end{bmatrix} \\ \text{RELPRO} & \\ \text{PRED} & \text{'see'} \\ \text{SUBJ} & i\begin{bmatrix} \text{PRED} & \text{'Chris'} \end{bmatrix} \\ \text{OBJ} & \end{bmatrix} \right\} \end{bmatrix} \end{bmatrix} \qquad f_\sigma\begin{bmatrix} \text{VAR} & v[\ ] \\ \text{RESTR} & r[\ ] \end{bmatrix}$$

- Augment relative clause rule with meaning constructor **[rel]**

(21) CP $\longrightarrow$ $\begin{pmatrix} \text{RelP} \\ (\uparrow \text{TOPIC}) = \downarrow \\ (\uparrow \text{TOPIC}) = (\uparrow \text{RTopicPath}) \\ (\uparrow \text{TOPIC RelPath}) = (\uparrow \text{RELPRO}) \\ (\uparrow \text{RELPRO PRONTYPE}) =_c \text{REL} \end{pmatrix} \begin{pmatrix} \text{C}' \\ \uparrow = \downarrow \\ \textbf{[rel]} \end{pmatrix}$

Semantic composition (cont.)

(22) **[rel]** $\lambda P.\lambda Q.\lambda X.P(X) \wedge Q(X)$:

$[(\uparrow \text{RELPRO})_\sigma \multimap \uparrow_\sigma] \multimap$

$[[((\text{ADJ} \in \uparrow)_\sigma \text{VAR}) \multimap ((\text{ADJ} \in \uparrow)_\sigma \text{RESTR})] \multimap$

$[((\text{ADJ} \in \uparrow)_\sigma \text{VAR}) \multimap ((\text{ADJ} \in \uparrow)_\sigma \text{RESTR})]]$

- Instantiated to nodes in (20):

(23) **[rel]** $\lambda P.\lambda Q.\lambda X.P(X) \wedge Q(X) : [h_\sigma \multimap g_\sigma] \multimap [[v \multimap r] \multimap [v \multimap r]]$

- Lexical entry for the relative pronoun:

(24) *who*

($\uparrow$ PRED) = 'PRO'

($\uparrow$ PRONTYPE) = REL

$\lambda S.\lambda X.\textit{person}(X) \wedge S(X)$:

$[\uparrow_\sigma \multimap (\text{RELPRO} \uparrow)_\sigma] \multimap [\uparrow_\sigma \multimap (\text{RELPRO} \uparrow)_\sigma]$

Semantic composition (cont.)

Meaning constructor premises for *man who Chris saw*:

[man]	$\lambda X.\textit{man}(X)$	:	$v \multimap r$
[who]	$\lambda S.\lambda X.\textit{person}(X) \wedge S(X)$	:	$[h_\sigma \multimap g_\sigma] \multimap [h_\sigma \multimap g_\sigma]$
[see]	$\lambda X.\lambda Y.\textit{see}(X,Y)$	:	$i_\sigma \multimap [h_\sigma \multimap g_\sigma]$
[Chris]	*Chris*	:	i_σ
[rel]	$\lambda P.\lambda Q.\lambda X.P(X) \wedge Q(X)$	:	$[h_\sigma \multimap g_\sigma] \multimap [[v \multimap r] \multimap [v \multimap r]]$

$$\dfrac{\dfrac{i_\sigma \quad \dfrac{i_\sigma \multimap [h_\sigma \multimap g_\sigma]}{h_\sigma \multimap g_\sigma} \quad [h_\sigma \multimap g_\sigma] \multimap [h_\sigma \multimap g_\sigma]}{v \multimap r} \quad \dfrac{h_\sigma \multimap g_\sigma \quad [h_\sigma \multimap g_\sigma] \multimap [[v \multimap r] \multimap [v \multimap r]]}{[v \multimap r] \multimap [v \multimap r]}}{\lambda X.person(X) \wedge see(Chris, X) \wedge man(X) : v \multimap r}$$

Reduced relative clauses

(25) man Chris saw

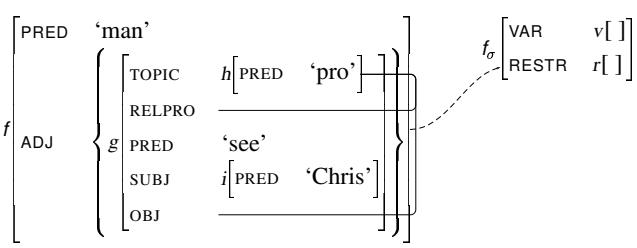

CP $\longrightarrow$ { RelP | ϵ } $\begin{pmatrix} \text{C}' \\ \uparrow = \downarrow \\ \textbf{[rel]} \end{pmatrix}$

($\uparrow$ TOPIC) = $\downarrow$ | ($\uparrow$ TOPIC ')' = 'PRO'

($\uparrow$ TOPIC) = ($\uparrow$ RTOPICPATH) ($\uparrow$ TOPIC)=($\uparrow$ RTOPICPATH)

($\uparrow$ TOPIC RELPATH) = ($\uparrow$ RELPRO) ($\uparrow$ TOPIC) = ($\uparrow$ RELPRO)

($\uparrow$ RELPRO PRONTYPE) $=_c$ REL

Reduced relative clauses (cont.)

Meaning constructor premises for *man Chris saw*:

[man]	$\lambda X.\textit{man}(X)$	:	$v \multimap r$
[see]	$\lambda X.\lambda Y.\textit{see}(X,Y)$	:	$i_\sigma \multimap [h_\sigma \multimap g_\sigma]$
[Chris]	*Chris*	:	i_σ
[rel]	$\lambda P.\lambda Q.\lambda X.P(X) \wedge Q(X)$	:	$[h_\sigma \multimap g_\sigma] \multimap [[v \multimap r] \multimap [v \multimap r]]$

$$\dfrac{v \multimap r \quad \dfrac{i_\sigma \quad \dfrac{i_\sigma \multimap [h_\sigma \multimap g_\sigma]}{h_\sigma \multimap g_\sigma} \quad [h_\sigma \multimap g_\sigma] \multimap [[v \multimap r] \multimap [v \multimap r]]}{[v \multimap r] \multimap [v \multimap r]}}{\lambda X.see(Chris, X) \wedge man(X) : v \multimap r}$$